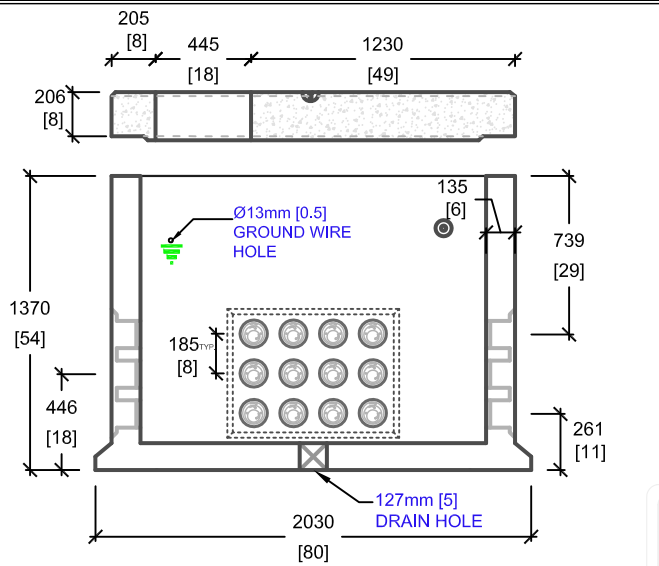

CROSS SECTION 'B'

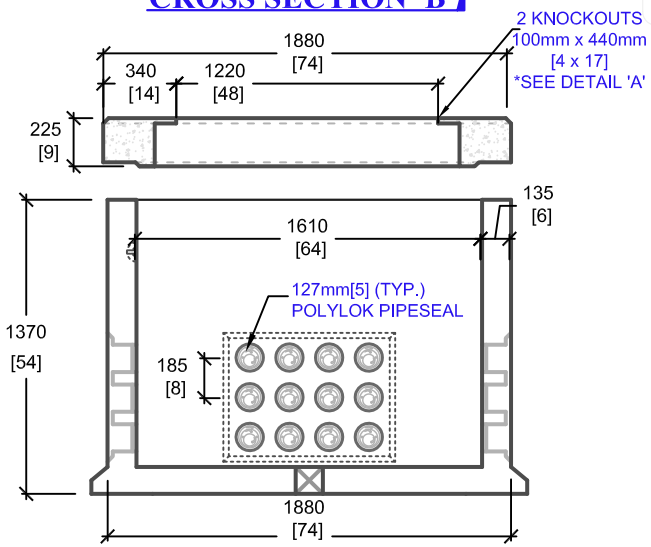

CROSS SECTION 'A'

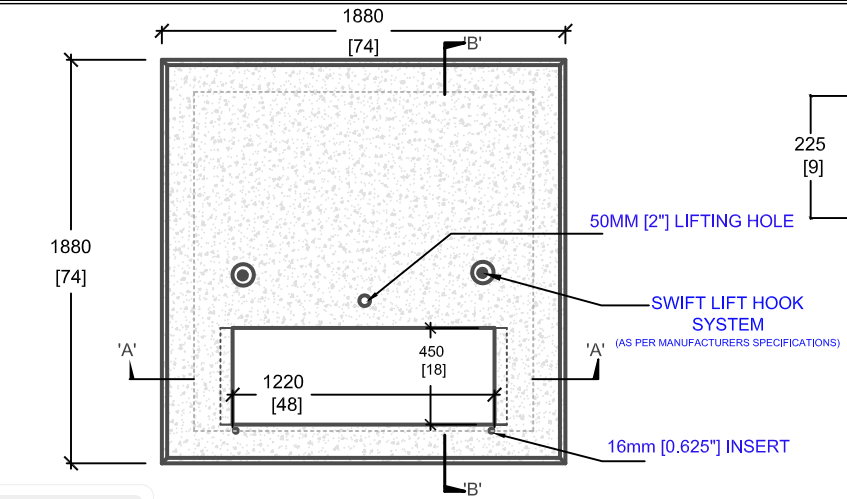

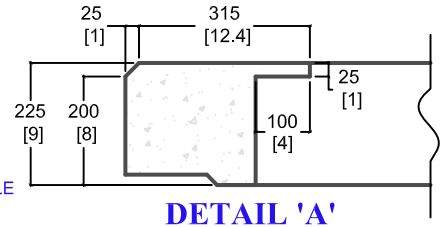

DETAIL 'A'

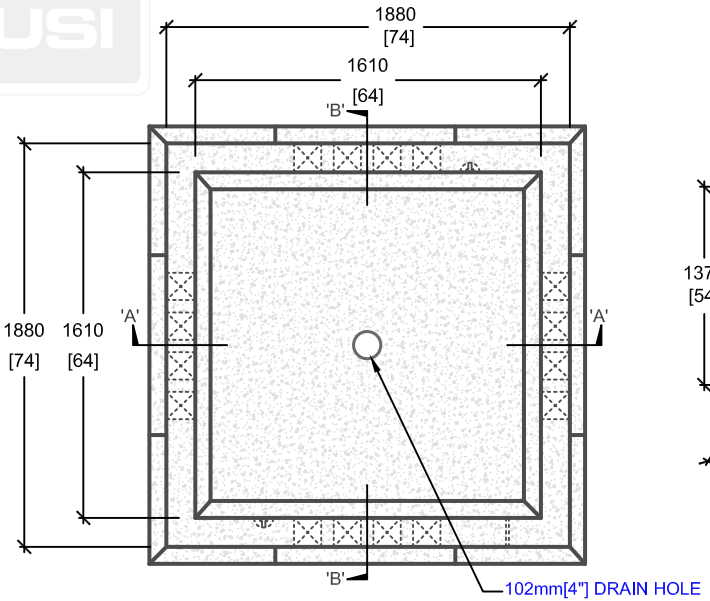

PLAN VIEW

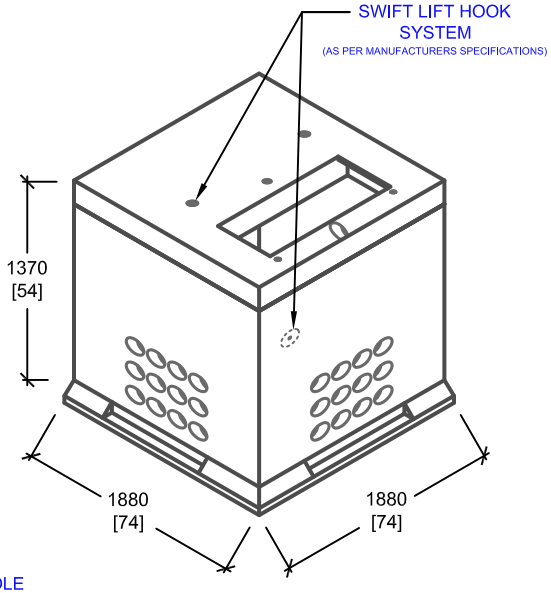

ISOMETRIC VIEW

mm
[Inches]
ALL DIMENSIONS DEFAULT TO MILLIMETRES

UTILITY STRUCTURES INC.
61 BONGARD AVE | OTTAWA, ON | K2E 6V2
T: 613.225.6398 F: 613.225.1681 TF: 800.267.6466
www.utilitystructures.com

CONSTRUCTION DETAILS:

- DESIGNED TO CL-625-ONT TRUCK LIVE LOADING AS PER CSA S6-06
- DESIGNED TO Kingston Utilities K03-03-123

- CSA 23.4
  - 35 MPa (5000psi) AT 28 DAYS
  - STRIPPING STRENGTH: MIN. 20 MPa(2900psi)
  - 5-8% AIR ENTRAINED
  - EXPOSURE CLASS: C-1
- REINFORCING: STEEL TO CSA CAN A23.1

PRODUCT DETAILS:

E-10B BASE
- (4) 127mm[5"] POLYLOK PIPESEAL WINDOWS (12 POLYLOKS PER WINDOW)
- CLOSED BOTTOM TRANSFORMER BASE

E-11 PAD:
- 1800mmx1800mm [O.D.]
- OPENING SIZE (1220mmx450mm).
- (2) 16mm[0.625"] INSERT

PRODUCT CODE:

E-10B + E-11- KH

3 Phase Transformer Base and Pad

OUTSIDE DIMENSIONS: 1.57m(H) x 1880mm x 1880mm [O.D.]

TOTAL WEIGHT: 5,450 kg / 11,990 lbs

REVISION DATE: November 14, 2019 | REV. # 2